Modular Assembly

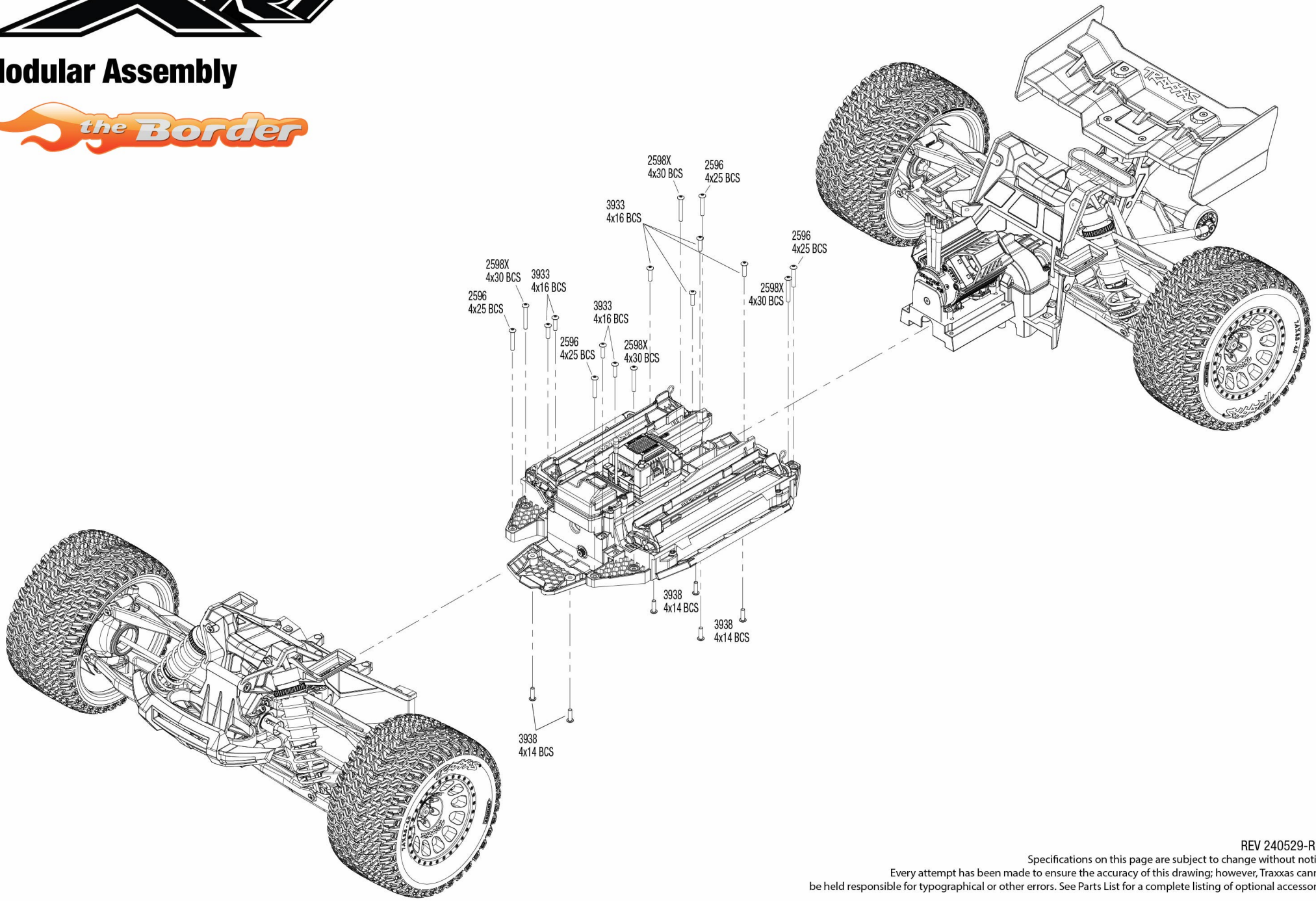

REV 240529-R17

Specifications on this page are subject to change without notice.
Every attempt has been made to ensure the accuracy of this drawing; however, Traxxas cannot be held responsible for typographical or other errors. See Parts List for a complete listing of optional accessories.

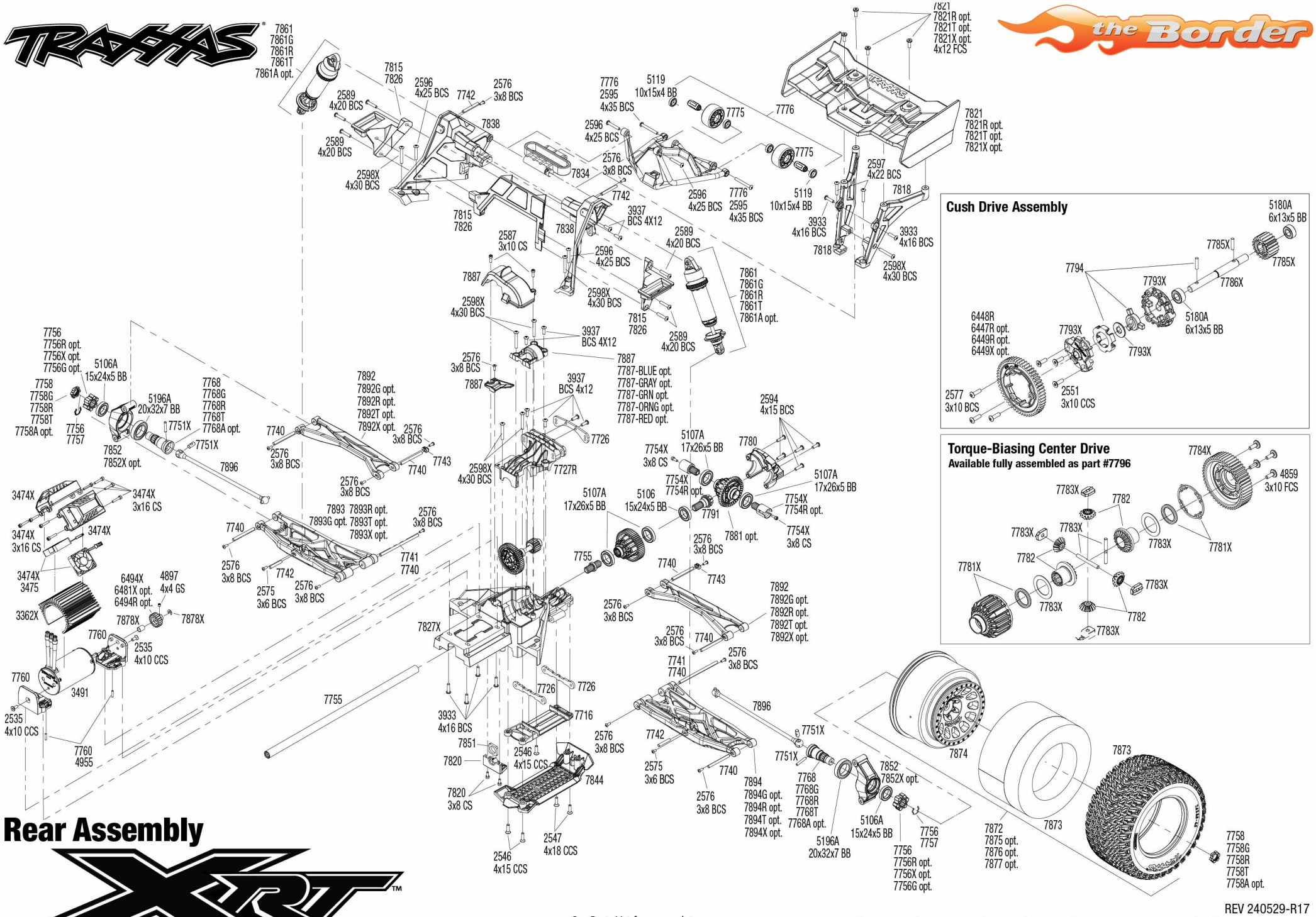

Rear Assembly

See Parts List for a complete listing of optional accessories.

REV 240529-R17

Specifications on this page are subject to change without notice. Every attempt has been made to ensure the accuracy of this drawing; however, Traxxas cannot be held responsible for typographical or other errors.

Body Assembly

7813
7816

7813
7814

7812A
7812G
7812R
7812T
7840
7812 opt.
7812X opt.
7898 opt.
7899 opt.

7813
7814

7813
7823

7813
7824

2584
3x12 CS

2584
3x12 CS

2584
3x12 CS

2584
3x12 CS

2584
3x12 CS

2584
3x12 CS

2584
3x12 CS

2584
3x12 CS

2584
3x12 CS

2584
3x12 CS

2584
3x12 CS

Completed Assembly (view from top)

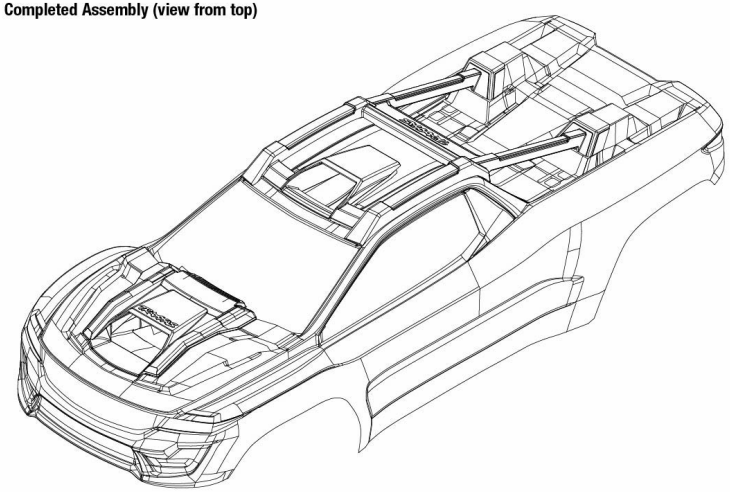

Completed Assembly (view from bottom)

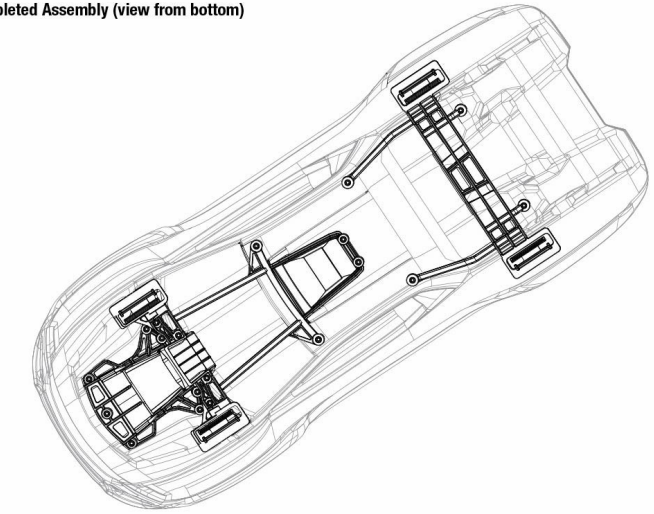

Specifications on this page are subject to change without notice. Every attempt has been made to ensure the accuracy of this drawing; however, Traxxas cannot be held responsible for typographical or other errors.

See Parts List for a complete listing of optional accessories.

REV 240529-R17

Chassis Assembly

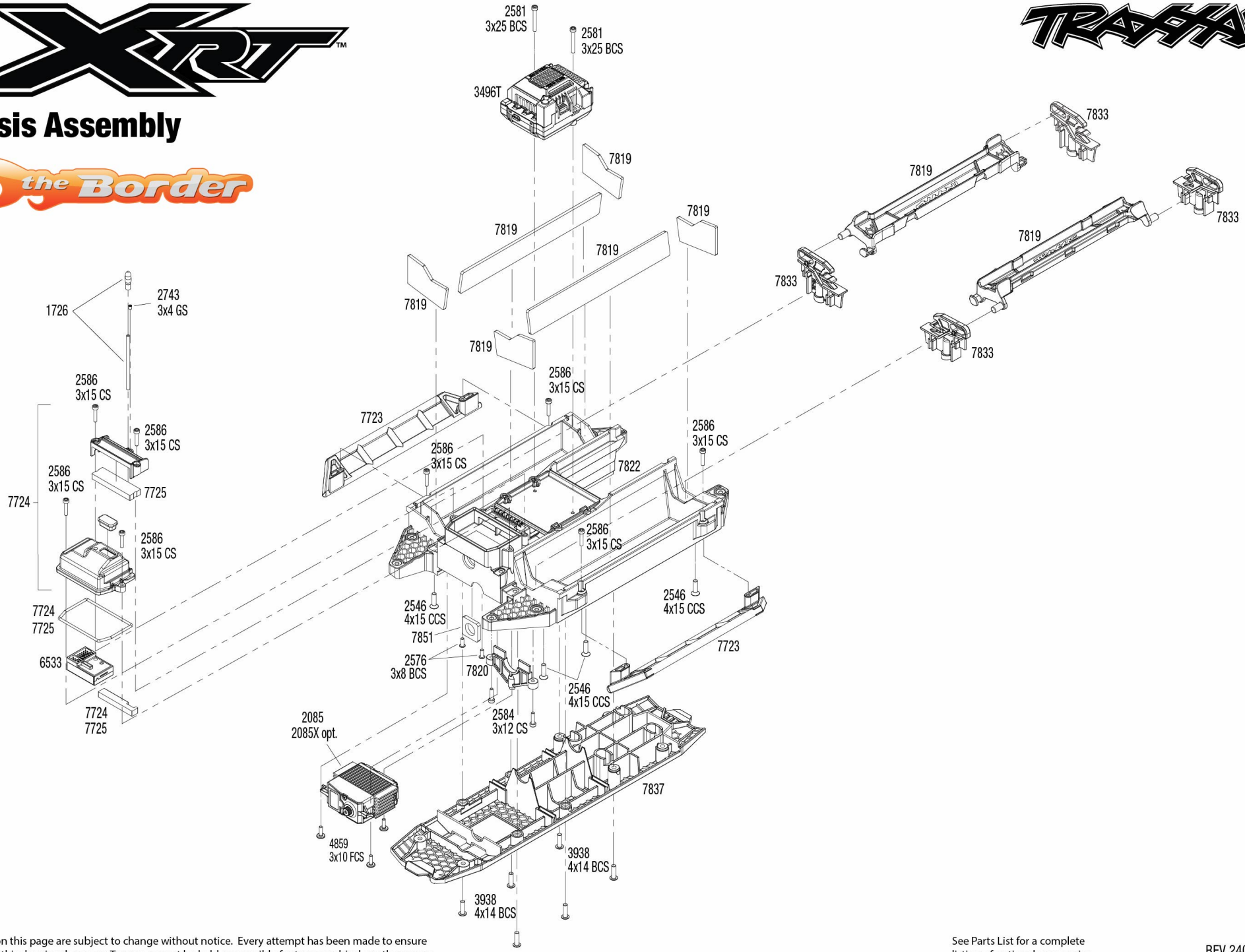

Specifications on this page are subject to change without notice. Every attempt has been made to ensure the accuracy of this drawing; however, Traxxas cannot be held responsible for typographical or other errors.

See Parts List for a complete listing of optional accessories.

REV 240529-R17

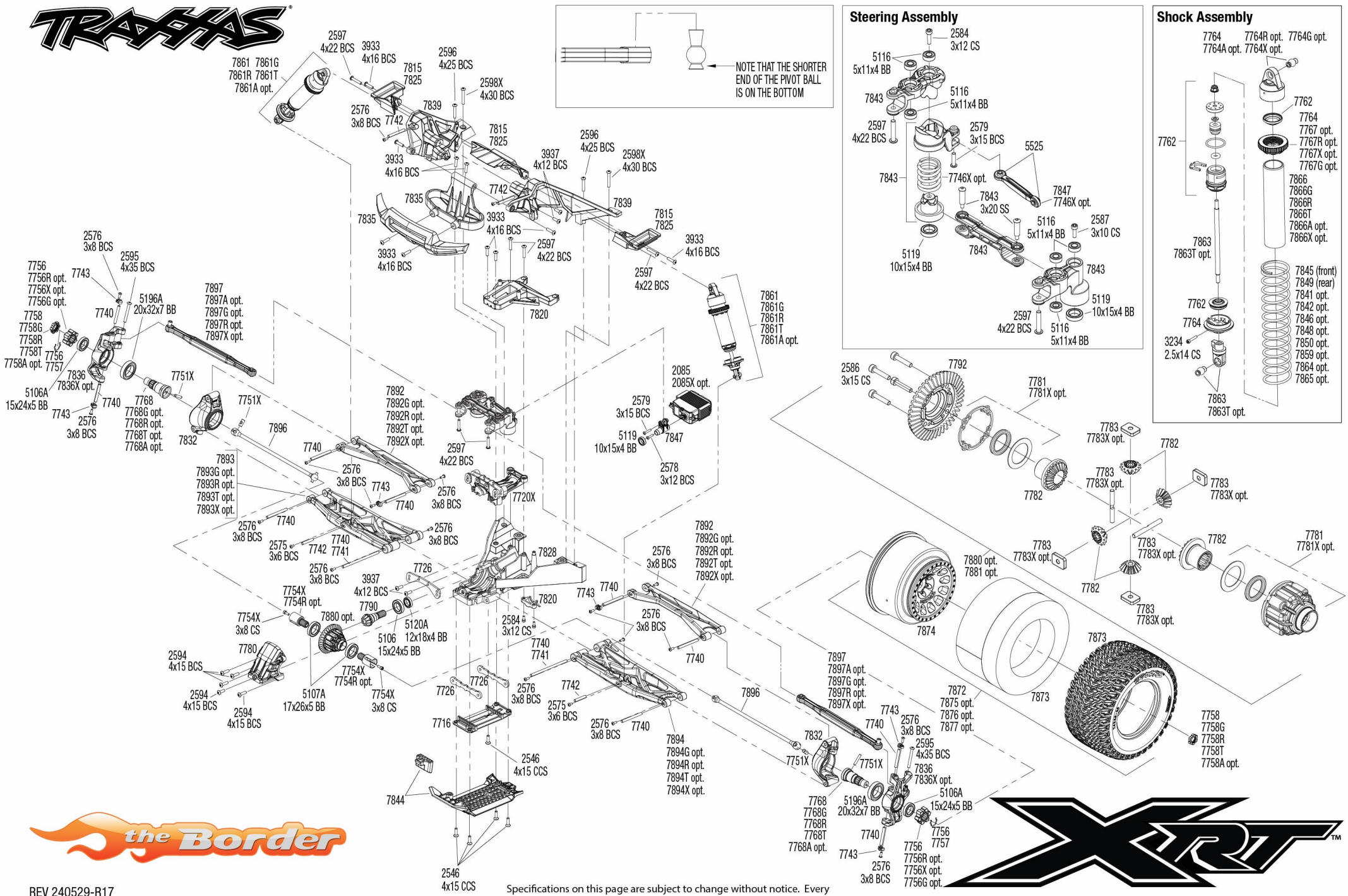

REV 240529-R17

See Parts List for a complete listing of optional accessories.

Specifications on this page are subject to change without notice. Every attempt has been made to ensure the accuracy of this drawing; however, Traxxas cannot be held responsible for typographical or other errors.